Peltier Energy Harvesting

Holly Kaapu
Kamehameha Schools Kapālama
Grade 12

Adult Sponsor: Gail Ishimoto
Mentor: Peter Grach

Problem

Electricity is an expensive resource in Hawaii, averaging 34 cents per kw/h, the highest price in the nation. Native Hawaiians living on the rural Hamakua Coast of Hawai‘i Island struggle to access electricity and water to maintain their traditional aspects of sustainable living. This community relies on propane as their primary energy source. Solar power and wind power are not economical options for this community. I wanted to find another way to produce clean energy that would help people who can’t access the standard electrical supply. My design plan includes an eco-friendly portable device made of peltier modules that would produce a sustainable source of energy.

Research Conducted

- Peltier modules are made up of two ceramic plates, one having n-type semiconductor, the other having p-type semiconductor, with bismuth telluride between the plates.The peltier module works when each side of the module is touching both a hot and a cold surface. This will cause the semiconductor on the inside (Bismuth Telluride) to react to the difference in temperatures. With the difference in temperature the semiconductor will create an output of electricity measured in voltage.

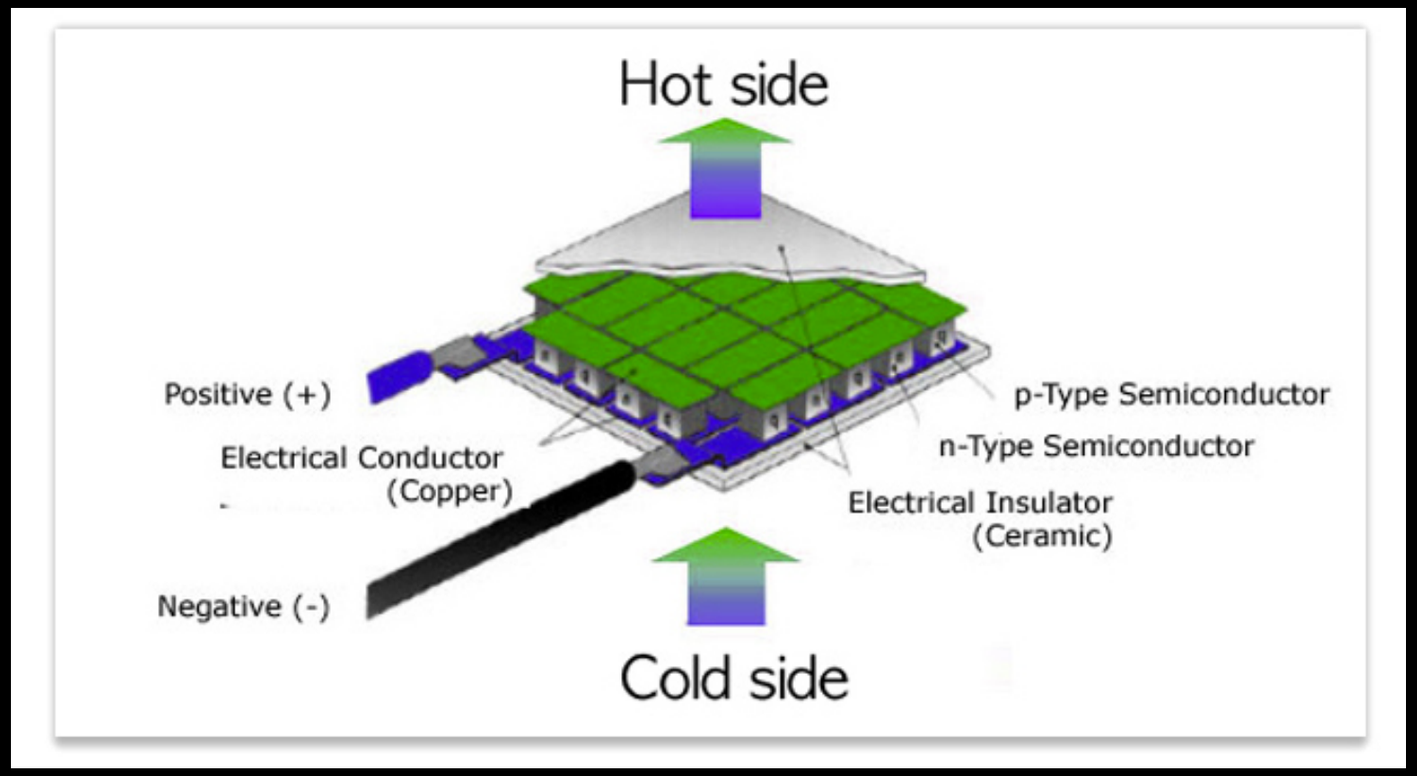

"New Powerful Cooling." *Central DS*. N.p., 2006. Web. 22 Oct. 2015.

Preliminary Testing

I put two peltier modules between two copper boxes that I constructed (using copper because it holds heat well). 60 degree Celsius water was placed in box 1 and 3 degree Celsius water was placed in box 2. I hypothesized that the most voltage output will be when the temperatures are significantly different. I predicted that the data will generate a linear graph according to reverse reaction of the nonlinear peltier effect (L´opez, et.al 2014). According to (Juarez-Acosta, et.al 2015), when the two extreme temperatures reach ambient temperatures, the system will produce little to no voltage. I predicted that there will be temperature leakage over a period of time due to copper box reacting on the other three sides with the ambient air (figure 1). I then constructed an insulation box to help reduce the amount of temperature leakage (figure 2). For both systems I ran tests until ambient temperatures were reached in both figures.

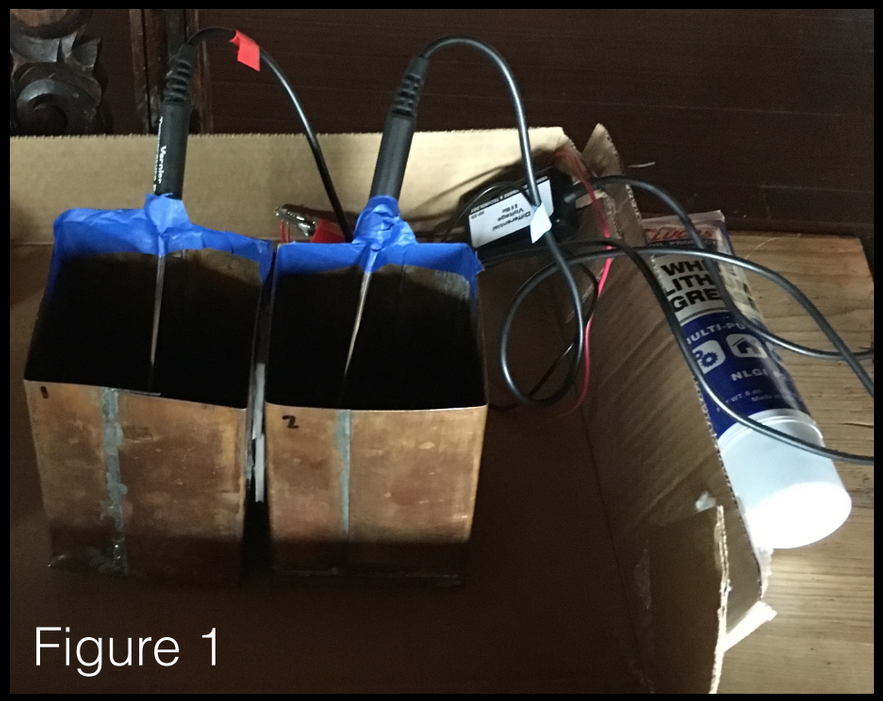
Figure 1

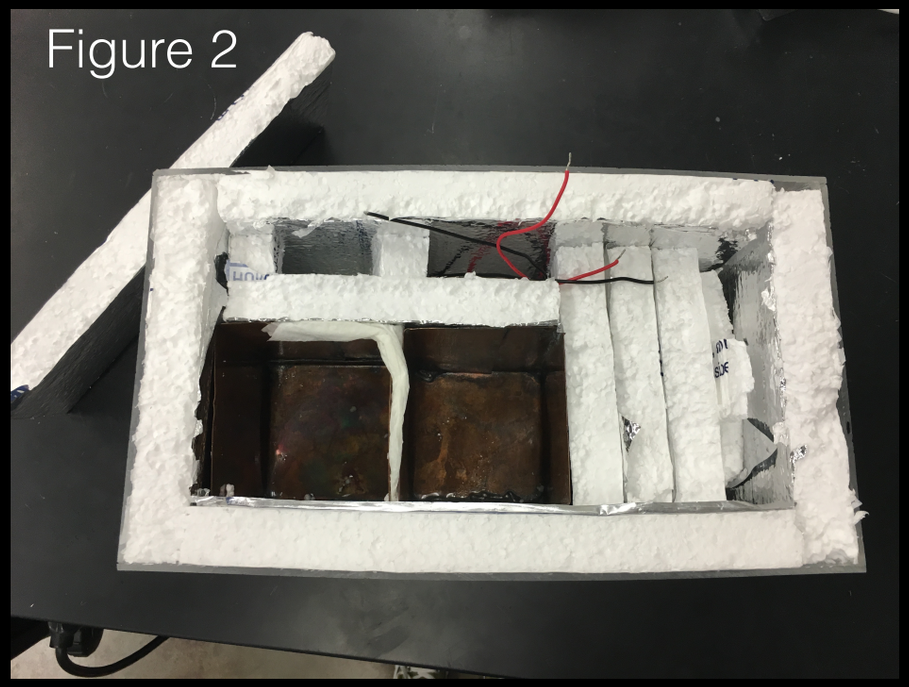
Figure 2

Preliminary Data from Non-insulated Box

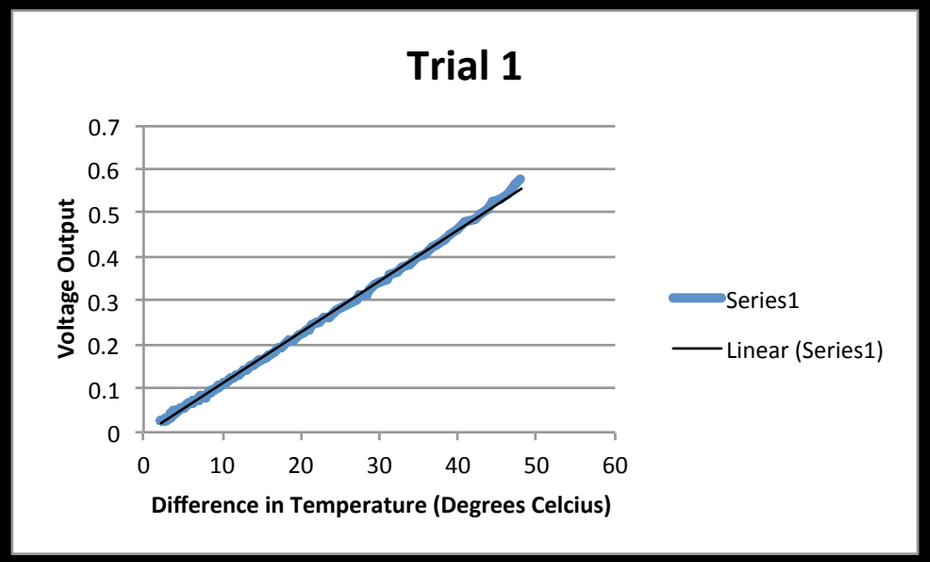

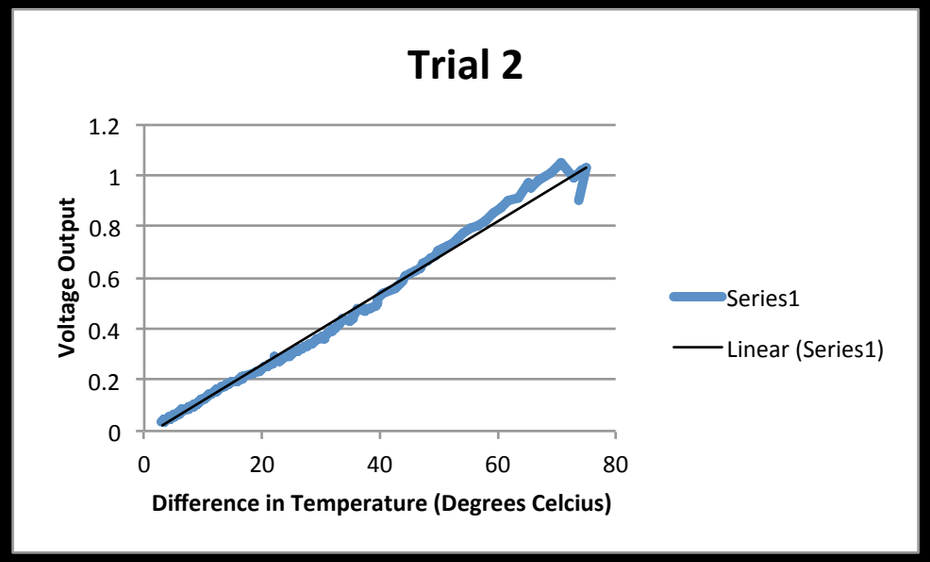

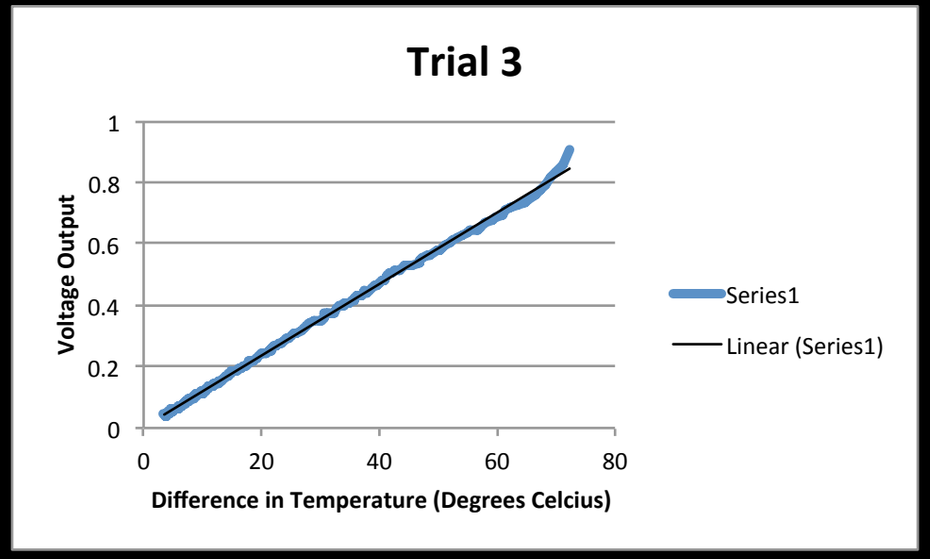

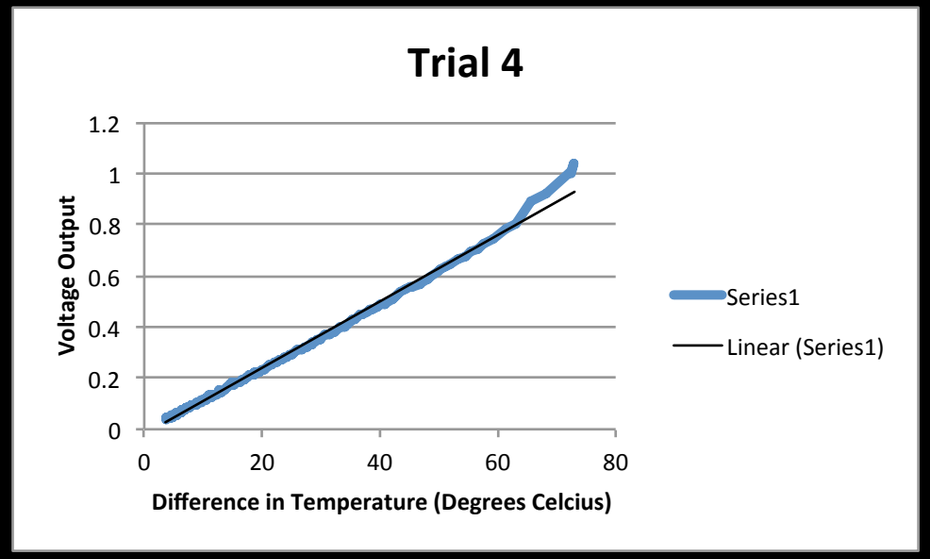

The graphs show that when the difference in temperatures decreases, the voltage output also decreases. Ice water (2 deg. C) was used for cold temperatures.

Preliminary Data from Insulated Box

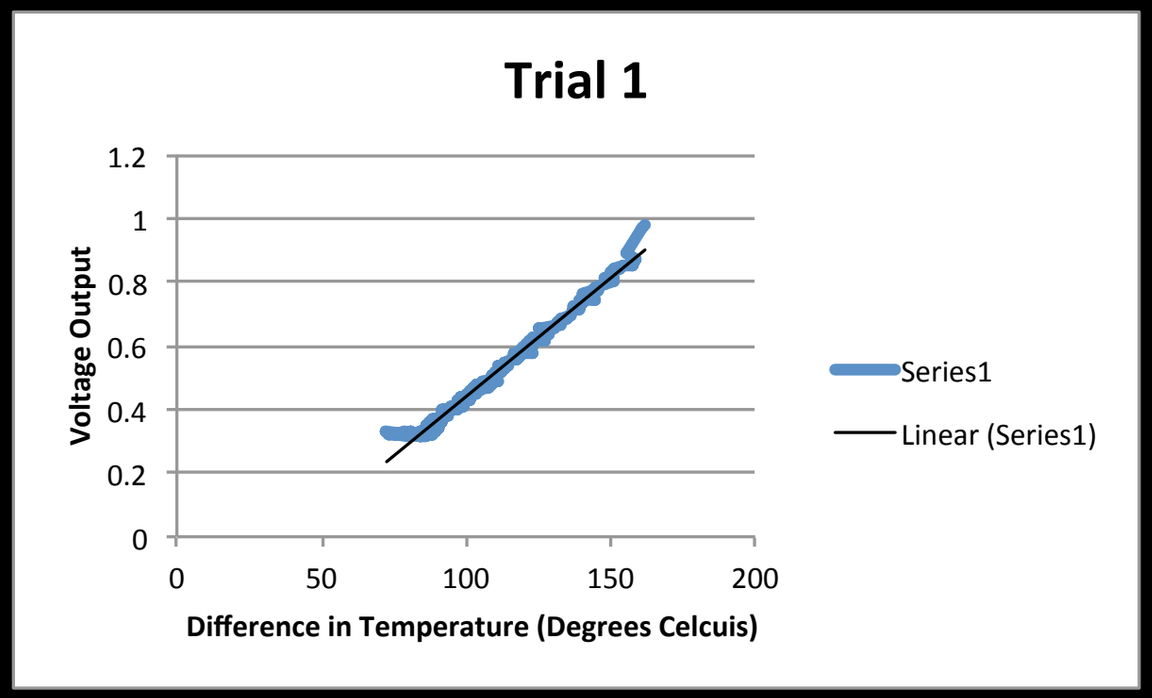

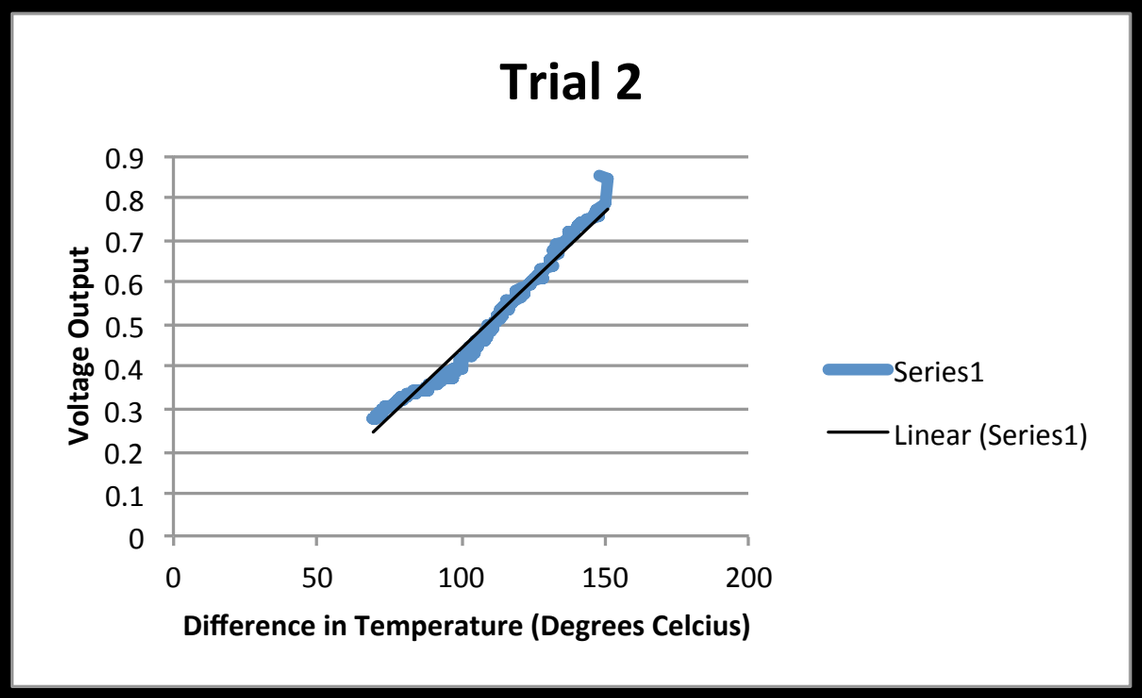

The graphs show that when the difference in temperatures decreases, the voltage output also decreases. Dry ice (-82 deg. C) was used for the cold temperatures in these trials.

Data Analysis

- The data in trials 1-4 with non-insulated box shows that the trends are similar. As T2-T1 = ΔT decreases, voltage output also decreases. It also shows that when the ΔT is at an 80 degree difference then the voltage output will be greater than or equal to one volt. From this data it shows that an 80 degree difference can sustain one volt until it reaches a 75 degree difference. From the 75 degree difference mark to 40 degree difference, the voltage output can sustain ranges varying from .99 to .5 volts. From a 40 degree difference to ambient temperatures the voltage ranges from .49 to 0 volts

- The data in trials 1-2 with insulated box, shows that the trends are similar. As T2-T1 = ΔT decreases, voltage output also decreases. Dry ice was used to see what the voltage output would be at such extremes. Towards the end of the trial there was evidence that the boxes were too close together. Heat sinks might need to be utilized because the dry ice temperatures cooled the hot water to the point that there was ice on one wall of the box parallel to the other box. This data was similar to the first four trials in the way that when the temperature difference was more drastic then it produced more voltage. Better insulation will be needed to produce higher voltages that will be able to sustain themselves over a period of time.

Proposed Prototype

- Based on this data analysis the prototype would include 6 peltier modules arranged in a series to light up the scaled down house with 10 LED lights. The house will be constructed with detachable panels for standard shipping.
- Pipes for hot and cold water will be placed throughout the prototype like a normal house would have.
- Fresnel Glass will be placed on the roof to heat up the water in the pipe.
- This prototype is multipurpose because the fresnel glass is heating up the water to 80 degrees Celsius for everyday use and then the hot water is circulating through the peltier system that produces electricity from the difference of temperatures (80 deg. C and ambient temperatures).

Constraints

- Development of insulation system with heat sinks is needed for this prototype, which includes completely separate insulation sections for each side to create maximum temperature differences that will produce the most voltage.

- Peltier modules have limitations on how much voltage they are able to produce depending on the size of the module. For the preliminary data, two modules were used that were only able to produce 12A.

- Fresnel Glass is a constraint for the device because depending on the thickness of the glass it will help to produce higher or lower temperatures.

- Good weather conditions are needed to test prototype and its effectiveness.

Developmental Design Sketches

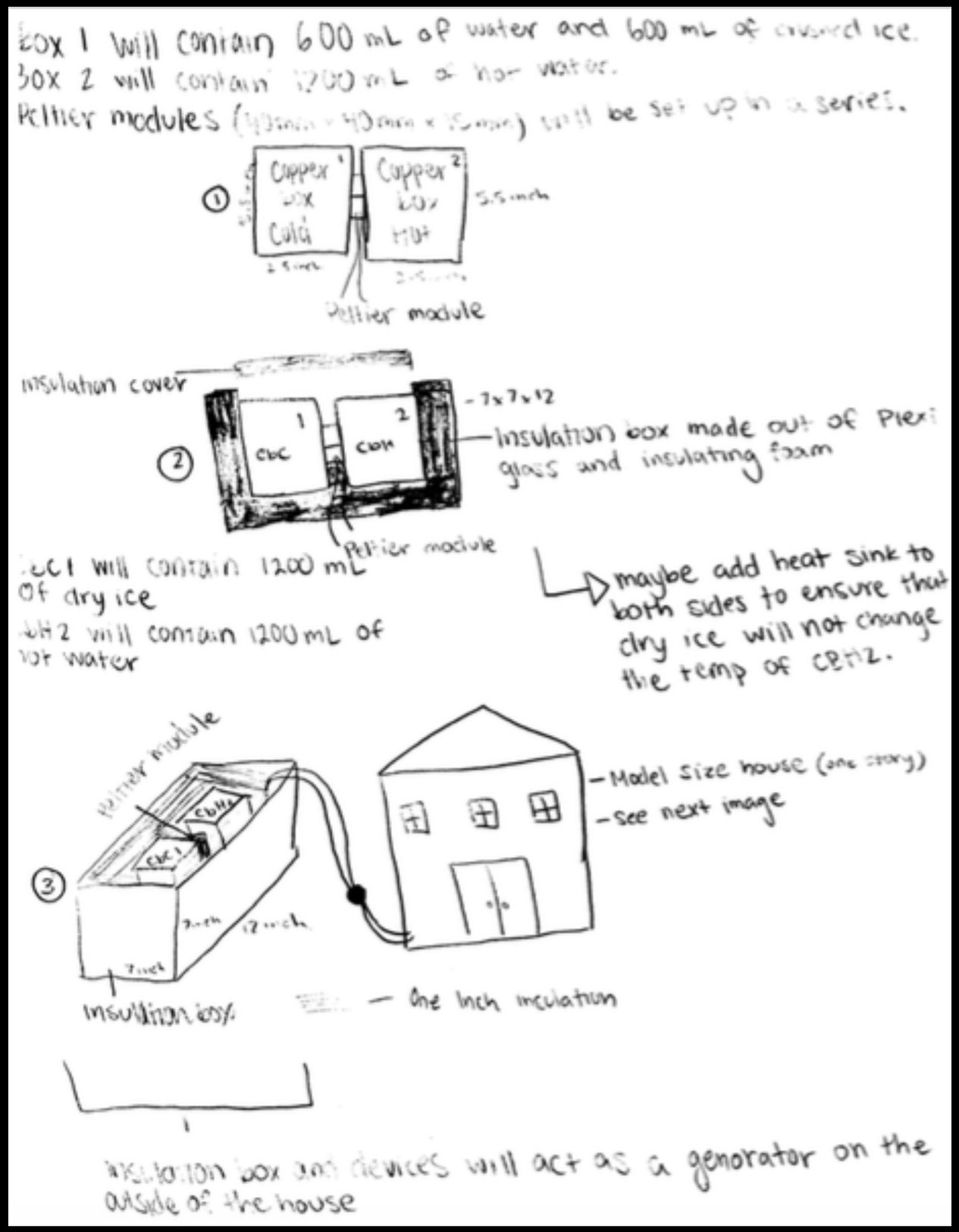

Design 1, includes two copper boxes and two peltier modules in the model.

Design 2, includes everything that design 1 has except now the boxes are in a insulation box.

Design 3 is putting design 2 to the test on a model home.

Final Design

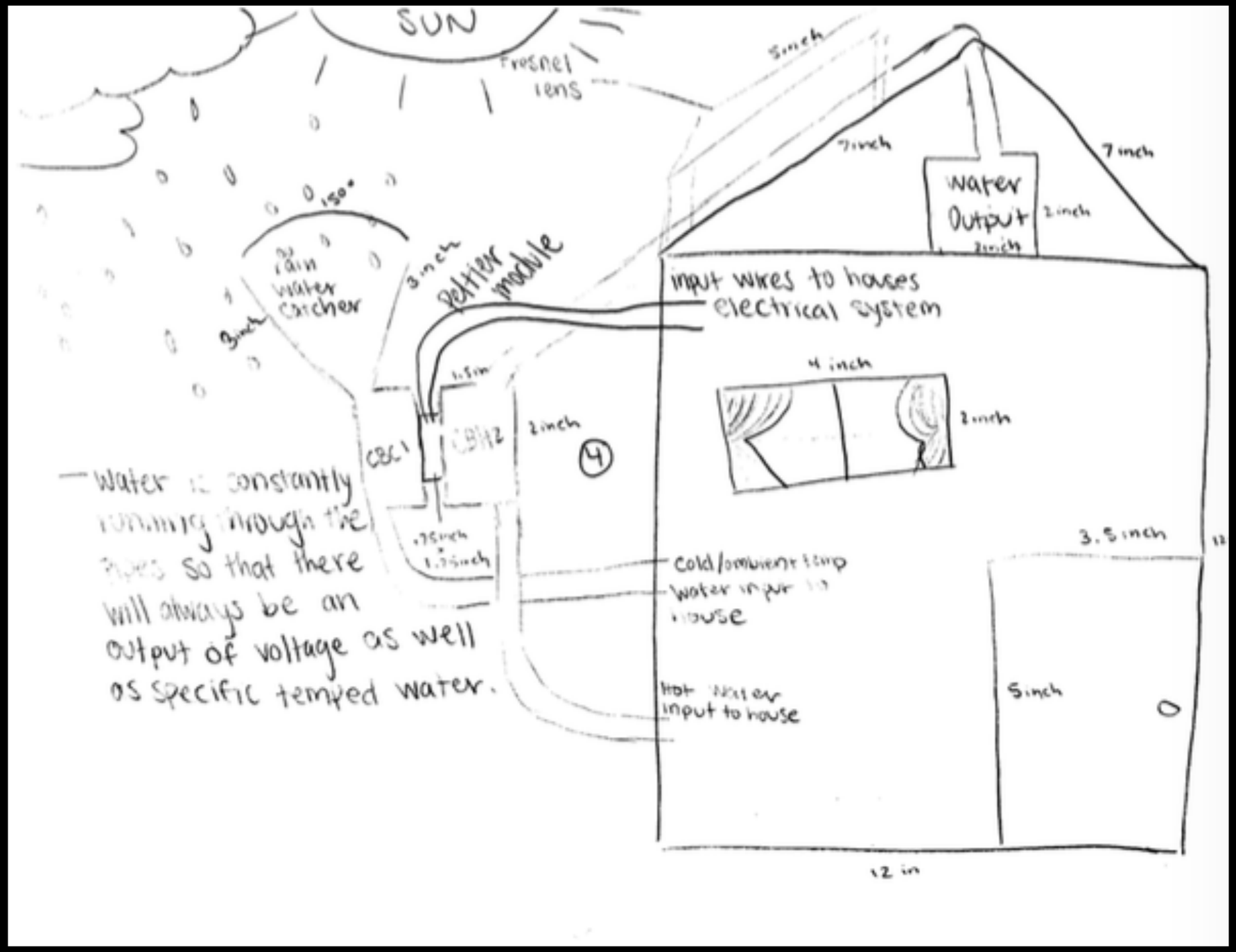

3-D Final Sketch

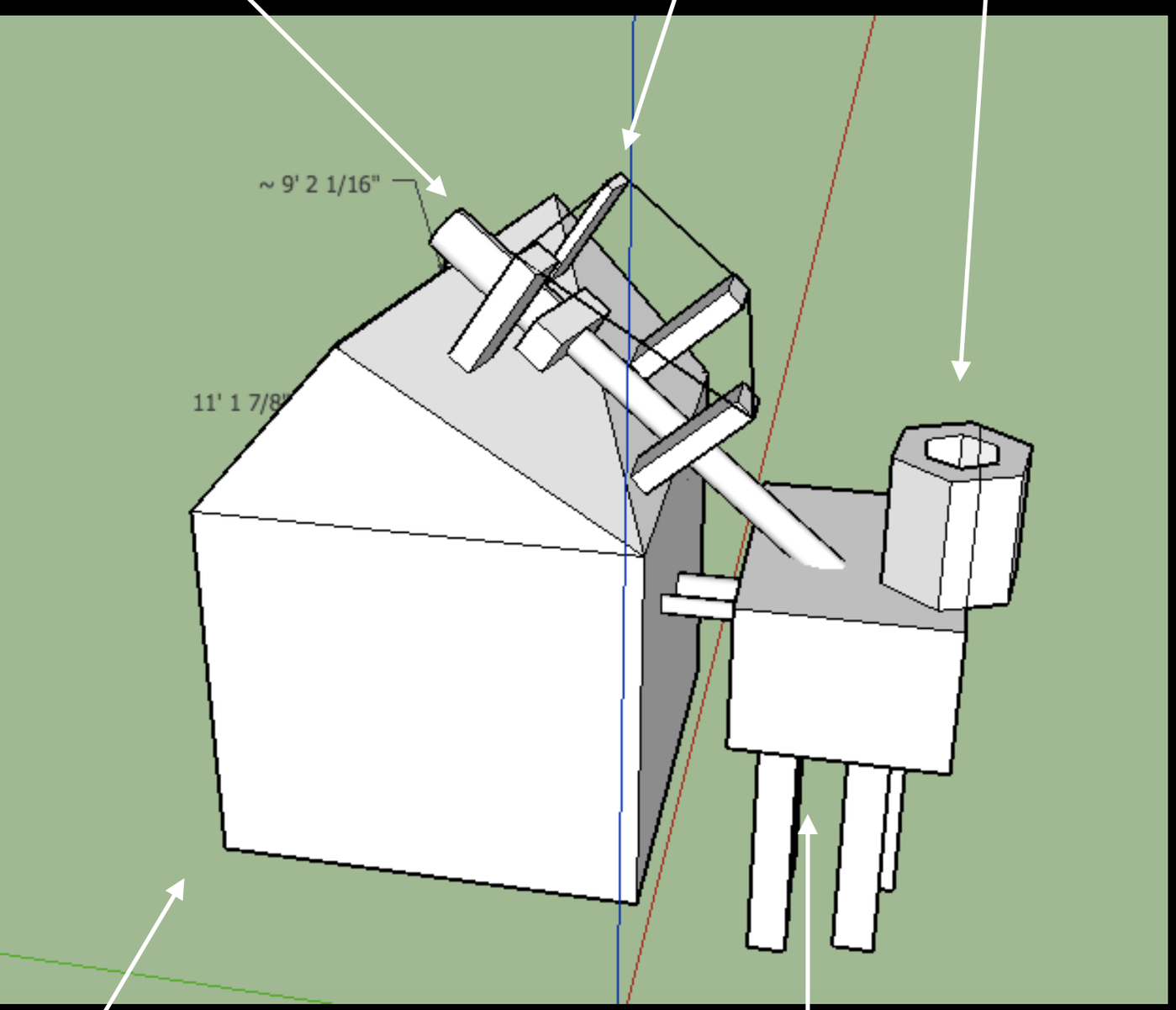

This is the prototype house with the hot water pipe coming from inside the house on to the roof, getting heated by the sun using a fresnel glass, then going through the peltier system where electricity is being generated to power the house. Then the hot water is going back into the house for consumption when needed.

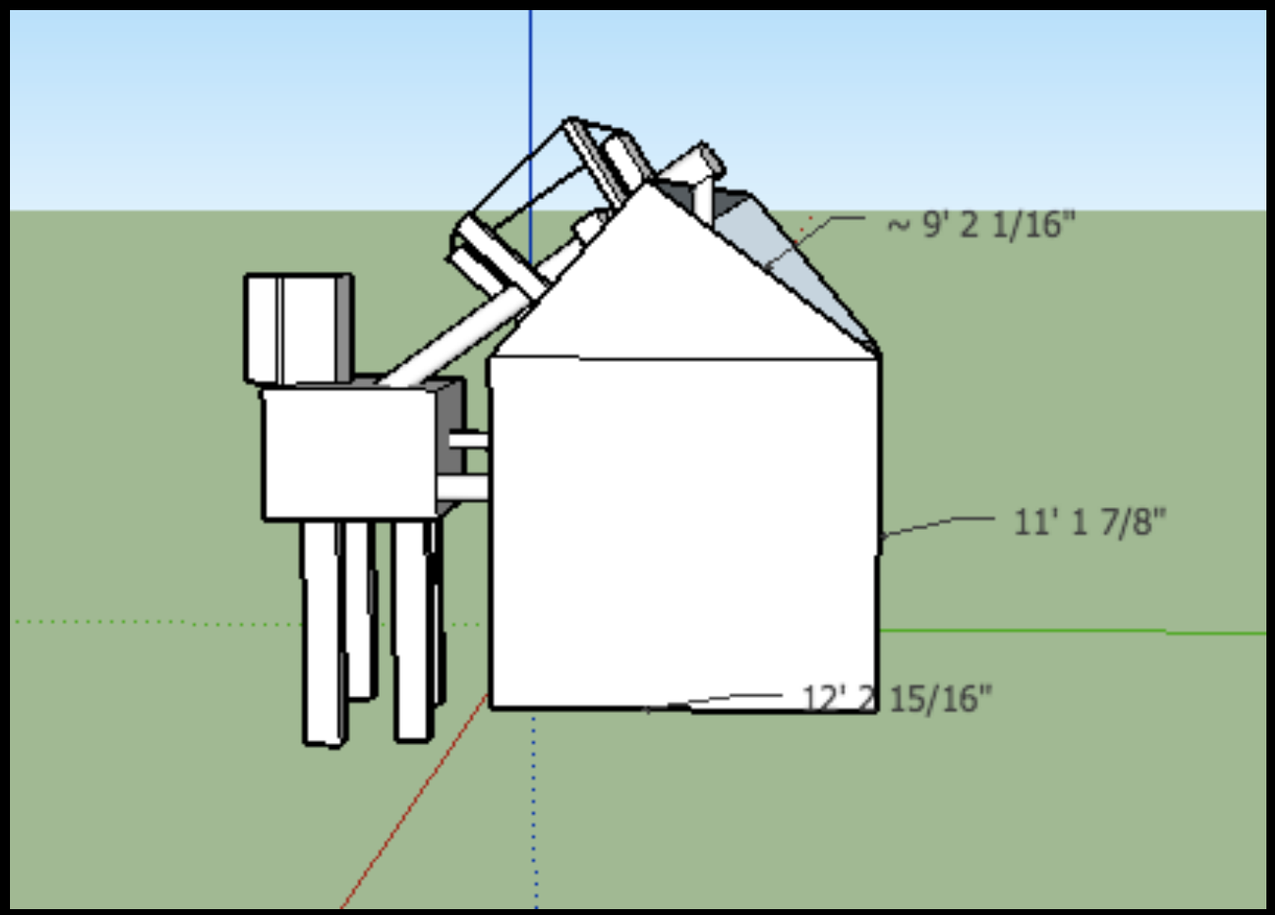

View from front door.

View from back side of the house.

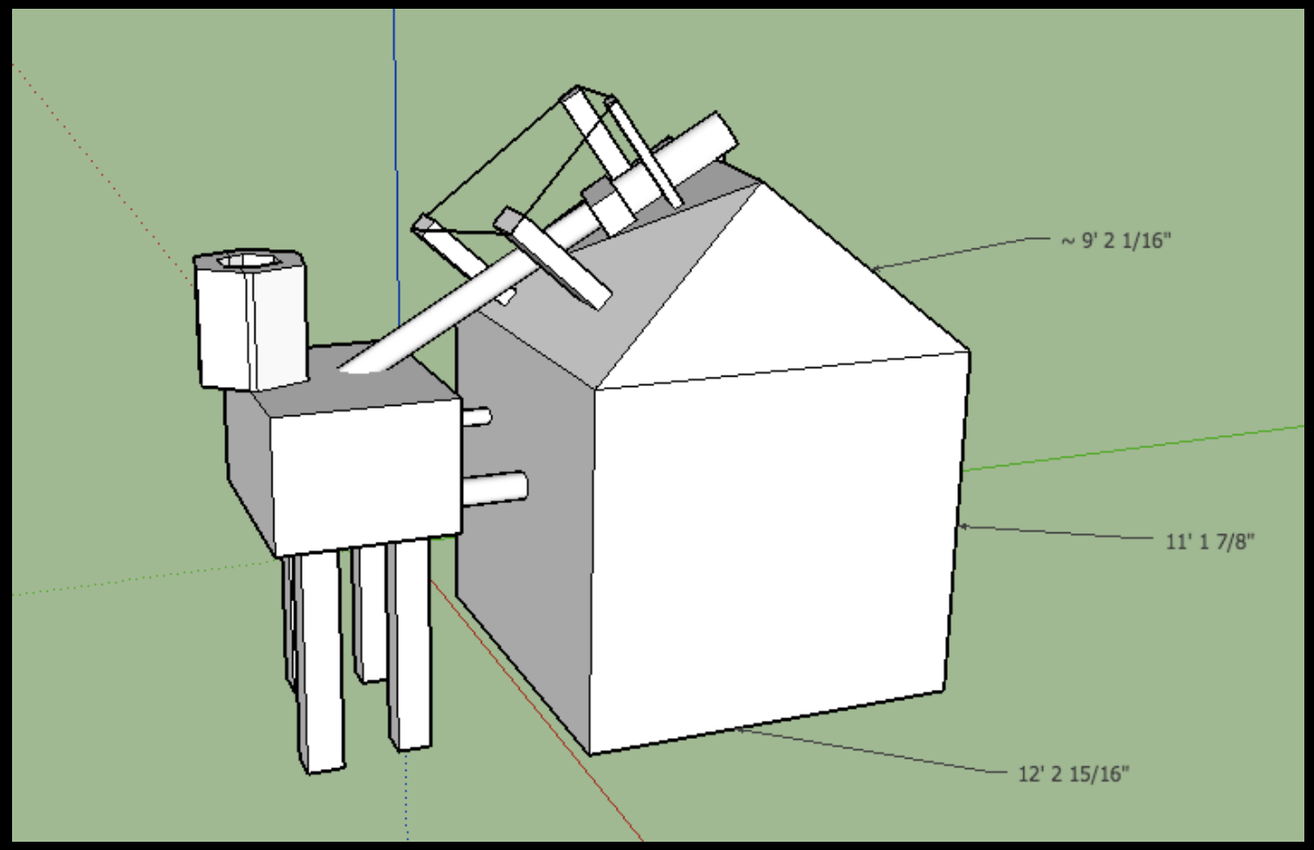

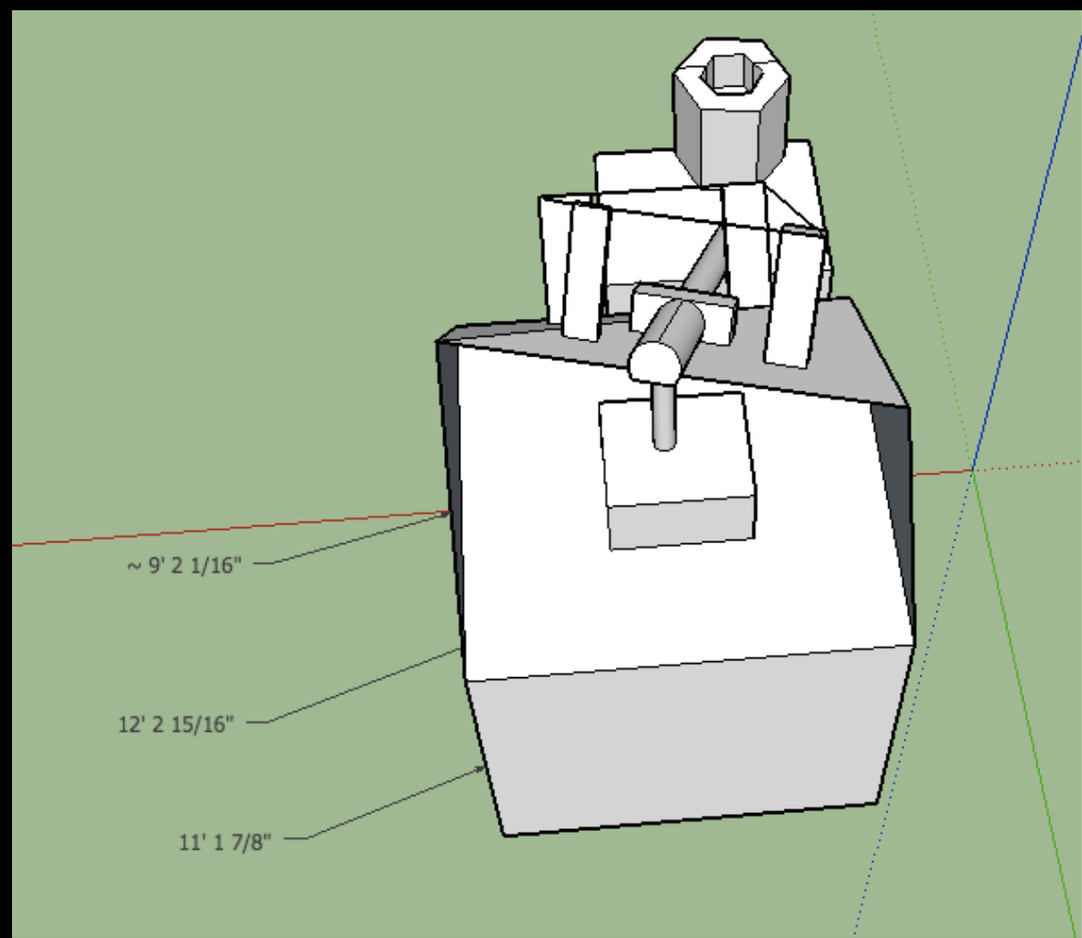

View from above, looking into attic with roof removed.

View from above.

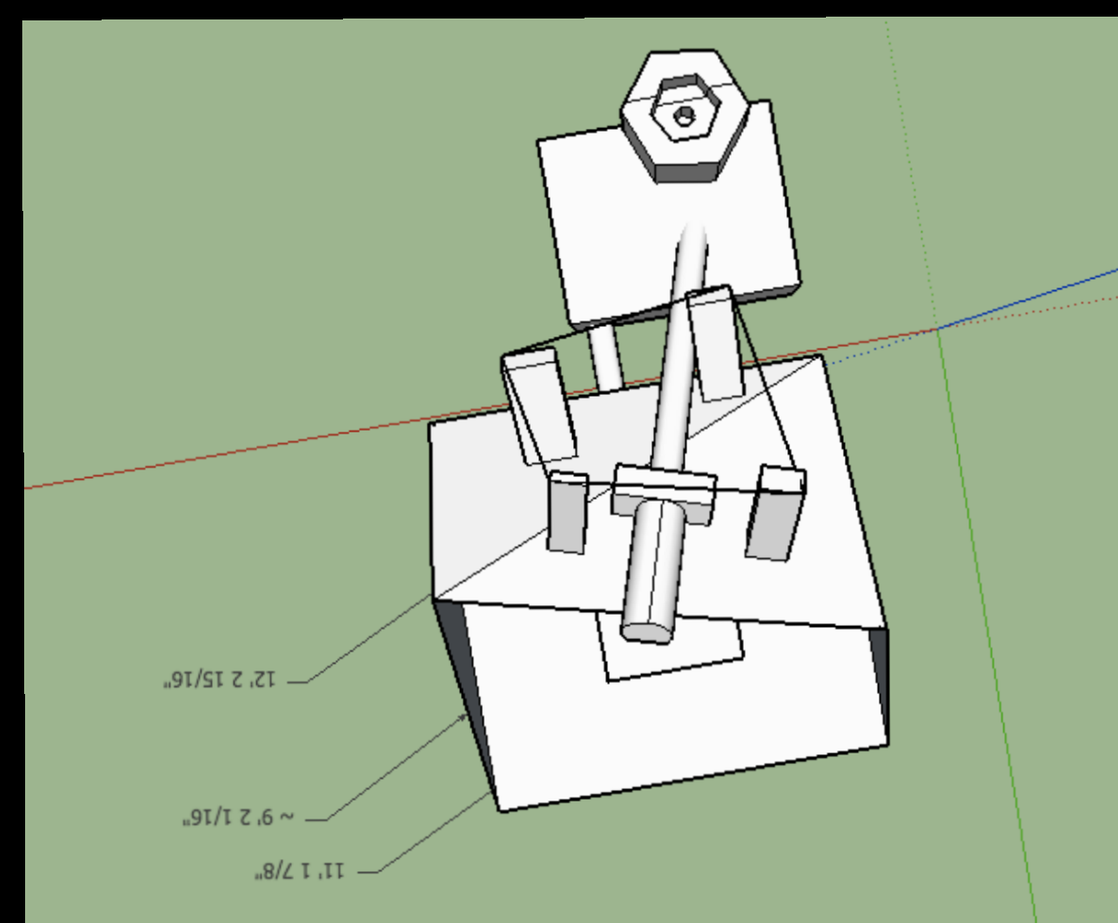

Budget

Total $1419.64

- 2 ft by 8 ft Copper Sheet (16-oz) $152.36
- 3 ft by 4 ft by 5/8 inch Plexi Glass Sheet $37.77
- 3 ft by 12 ft by 1 inch Foam Sheet $22.18
- Five Piece Soldering Torch $57.97
- Flux $9.36
- Solder $21.67
- Peltier Modules (6) (40mm x 40mm x 15mm) $159.85
- Plywood 4ft by 8ft by 1 inch $12.55
- Philips Bugle-Head Coarse Thread Sharp Point Polymer Coated Exterior Screws (pack) $8.91
- 10 LED single lights $74.40
- Electric Wiring 250 ft $41.57
- 3/4 Inch x 100 ft Blue PEX Pipe $61.44
- 2 Light Water Pump $22.88
- 5 Pack Fresnel Glass 7in by 11in $24.85
- Miscellaneous Construction Supplies $150.00

Continued on next page

Additional Supplies to Reconstruct Prototype if Revisions are Necessary

- 2 ft by 8 ft Copper Sheet (16-oz) $152.36
- 3 ft by 4 ft by 5/8 inch Plexi Glass Sheet $37.77
- 3 ft by 12 ft by 1 inch Foam Sheet $22.18Plywood 4ft by 8ft by 1 inch $12.55
- Philips Bugle-Head Coarse Thread Sharp Point Polymer Coated Exterior Screws (pack) $8.91
- 10 LED single lights $74.40
- Electric Wiring 250 ft $41.57
- 3/4 Inch x 100 ft Blue PEX Pipe $61.44
- 2 Light Water Pump $22.88
- Miscellaneous Construction Supplies $150.00

Implementation Plan

Month Dec. Year 2015

Sunday	Monday	Tuesday	Wednesday	Thursday	Friday	Saturday
		15	16	17	18	19 create plan of attack
20 Gather materials for house	21 order supplies online if needed	22	23 Build base of house	24	25	26 build walls of the house
27	28 Design roof	29 Finish building the roof	30	31 start electrical wiring		

Implementation Plan

Month JAN Year 2016

Sunday	Monday	Tuesday	Wednesday	Thursday	Friday	Saturday
					1 finish electrical wiring	2 start the cold water piping
3	4 finish cold water piping	5	6 Organize the materials for peltier device	7	8 recieve online orders	9 start building peltier device
10 finish peltier device	11 combine them	12 make finishing adjustments	13	14 trial 1	15 adjustments	16 trial 2
17 trial 3	18	19 adjustments	20	21 trial 4	22 adjustments	23 trail 5
24 trial 6	25 adjustments	26 trial 7	27 adjustments	28 trail 8	29 adjustments	30 trial 9
31 trial 10						

Implementation Plan

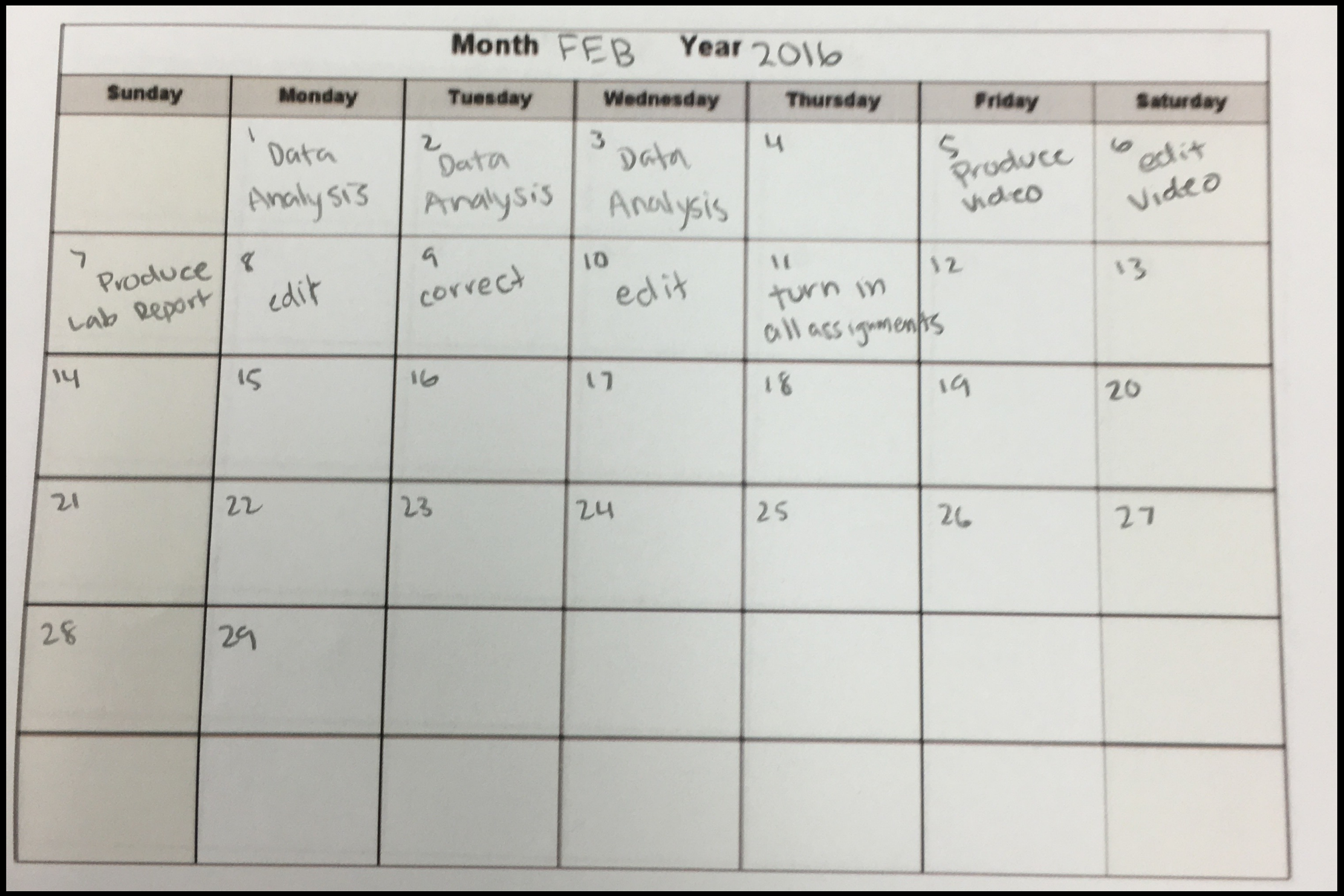

Month FEB Year 2016

Sunday	Monday	Tuesday	Wednesday	Thursday	Friday	Saturday
	1 Data Analysis	2 Data Analysis	3 Data Analysis	4	5 Produce video	6 edit video
7 Produce Lab Report	8 edit	9 correct	10 edit	11 turn in all assignments	12	13
14	15	16	17	18	19	20
21	22	23	24	25	26	27
28	29					

Bibliography

Flipse, J.; Dejene, F. K.; Wagenaar, D.; Bauer, G. E. W.; Ben Youssef, J.; Van Wees, B. J. "Observation of the Spin Peltier Effect."
Effect

Juarez-Acosta, Isaac; Olivares-Robles, Miguel A.; Bosu, Subrojati; Sakuraba, Yuya; Kubota, Takahide; Takahashi, Saburo; Takanashi, Koki; Bauer, Gerrit E. W. "Modelling of the Peltier Effect in Magnetic Multilayers."
Effect in Magnetic Multilayers

López, Rosa; Hwang, Sun-Yong; Sánchez, David. "Thermoelectric Effects in Quantum Hall Systems beyond Linear Response."
Quantum Hall Systems beyond Linear Response
2015.

Cahaya, Adam B.; Tretiakov, Oleg A.; Bauer, G. E. W. "Spin Seebeck Power Conversion."
2015.